

1. SURFACE COURSE
40mm THICKNESS OF HRA 30/14 F to CLAUSE 911
WITH PRE COATED CHIPPINGS

2. BINDER COURSE
40mm THICKNESS OF AC 20 dense/HDM/HMB bin
TO CLAUSE 906 100 PEN

3. BASE COURSE
80mm OF AC 32 dense/HDM base TO CLAUSE 903
100 PEN

4. SUB BASE
300mm* TYPE 1 GRANULAR SUB BASE TO
CLAUSE 803

*BASED ON A CBR OF 3%. IF THIS IS FOUND TO
DIFFER ON SITE, CONTACT ENGINEER.

ADOPTABLE ESTATE ROAD - HOT ROLLED ASPHALT SURFACING DETAIL 1
SCALE 1:20

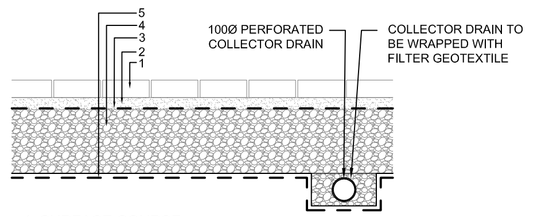

1. SURFACE COURSE
80mm CONCRETE PERMEABLE BLOCK PAVING.
BLOCK LAID IN 90 DEGREE HERRINGBONE
PATTERN.

2. BINDER COURSE
50mm THICKNESS OF 3-6mm AGGREGATE

3. GEOTEXTILE
TERRAM T700 OR SIMILAR APPROVED

4. BASE
300mm OF TYPE 3 GRANULAR MATERIAL
(MINIMUM OF 30% VOID RATIO)

5. GEOTEXTILE
TERRAM T700 OR SIMILAR APPROVED

PRIVATE PERMEABLE BLOCK DRIVEWAYS - DETAIL 2
SCALE 1:20

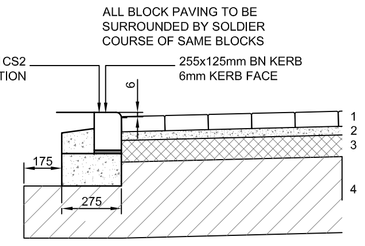

1. SURFACE COURSE
80mm THK BLOCKWORK LAID AT 90mm DEGREE
HERRINGBONE PATTERN

2. LAYING COURSE
30mm SAND BEDDING (COMPACTED)

3. BASE
130mm THICK OF 0/32mm NOMINAL SIZE HEAVY DUTY
BITUMINOUS MACADAM (100 PEN)

3. SUB - BASE
350mm OF GRANULAR SUB BASE MATERIAL TYPE 1 TO
CLAUSE 803

DESIGNED IN ACCORDANCE WITH BS7533-1:2001

*BASED ON CBR OF 3% - SUB BASE/CAPPING DEPTHS
WILL REQUIRE AMENDMENTS IF FORMATION CBR
RESULTS ARE FOUND TO DIFFER.

ADOPTABLE ESTATE ROAD - BLOCK PAVED SURFACING - RAISED TABLE DETAIL 3
SCALE 1:20

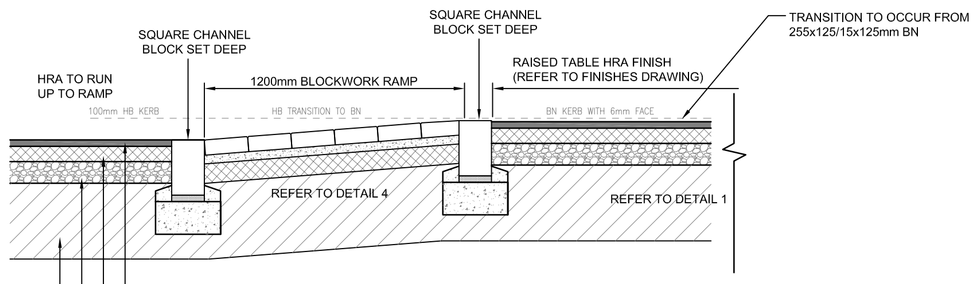

1. SURFACE COURSE
40mm THICKNESS OF HRA 30/14 F surf

2. BINDER COURSE
40mm THICKNESS OF AC 20 dense/HDM/HMB bin

3. BASE COURSE
80mm THICK OF AC 32 dense/HDM/HMB base

4. SUB BASE
300mm* TYPE 1 GRANULAR SUB BASE TO HIGHWAYS
AGENCY SPECIFICATIONS CLAUSE 803

*BASED ON CBR OF 2.5% - SUB BASE/CAPPING
DEPTHS WILL REQUIRE AMENDMENTS IF FORMATION
CBR RESULTS ARE FOUND TO DIFFER.

TYPICAL SECTION THROUGH ADOPTABLE ESTATE ROAD & BLOCKS/ASPHALT RAISED TABLE RAMP DETAIL 7
SCALE 1:20

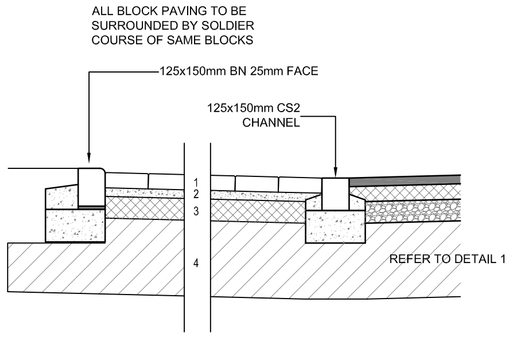

1. SURFACE COURSE
80mm THK BLOCKWORK LAID AT 90mm DEGREE
HERRINGBONE PATTERN

2. LAYING COURSE
30mm SAND BEDDING (COMPACTED)

3. BASE
130mm THICK OF 0/32mm NOMINAL SIZE HEAVY DUTY
BITUMINOUS MACADAM (100 PEN)

3. SUB - BASE
350mm OF GRANULAR SUB BASE MATERIAL TYPE 1
TO CLAUSE 803

DESIGNED IN ACCORDANCE WITH BS7533-1:2001

*BASED ON CBR OF 3% - SUB BASE/CAPPING DEPTHS
WILL REQUIRE AMENDMENTS IF FORMATION CBR
RESULTS ARE FOUND TO DIFFER.

ADOPTABLE ESTATE ROAD - BLOCK PAVED PARKING BAY/LAYBY DETAIL 4
SCALE 1:20

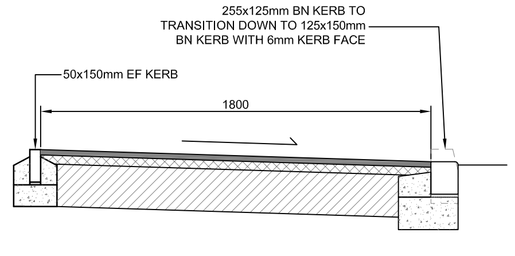

1. SURFACE COURSE
25mm THICKNESS OF AC 6 MED SURF

2. BINDER COURSE
40mm THICKNESS OF AC 20 dense/HDM/HMB bin
TO HIGHWAYS AGENCY SPECIFICATIONS CLAUSE 906

3. SUB BASE
200mm TYPE 1 GRANULAR SUB BASE
TO CLAUSE 803

ADOPTABLE FOOTPATH - FLEXIBLE SURFACING VEHICLE CROSSING LOCATIONS DETAIL 5
SCALE 1:20

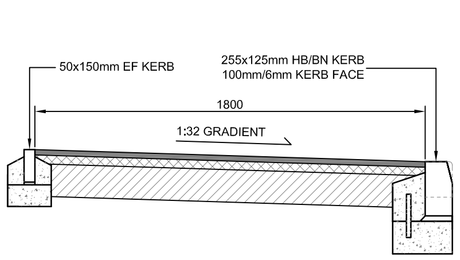

1. SURFACE COURSE
25mm THICKNESS OF AC 6 MED SURF

2. BINDER COURSE
40mm THICKNESS OF AC 20 dense/HDM/HMB bin
TO HIGHWAYS AGENCY SPECIFICATIONS CLAUSE 906

3. SUB BASE
150mm TYPE 1 GRANULAR SUB BASE
TO CLAUSE 803

ADOPTABLE FOOTPATH - FLEXIBLE SURFACING DETAIL 6
SCALE 1:20

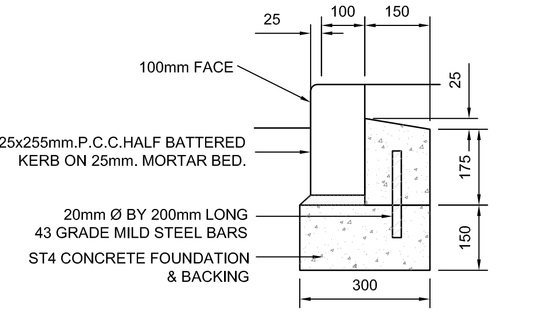

TYPICAL PCC LARGE BULLNOSE KERB
SCALE 1:10

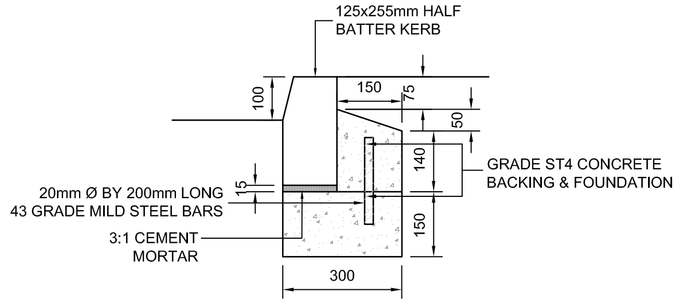

TYPICAL HALF BATTER KERB DETAIL (HB2)
SCALE 1:10

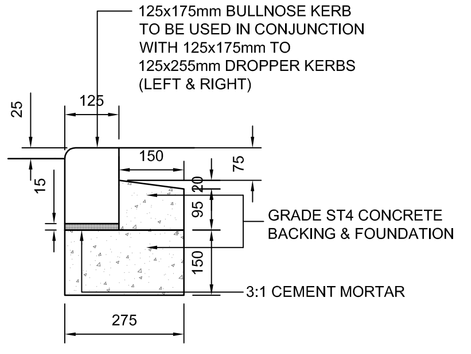

TYPICAL PCC SMALL BULLNOSE KERB DETAIL
SCALE 1:10

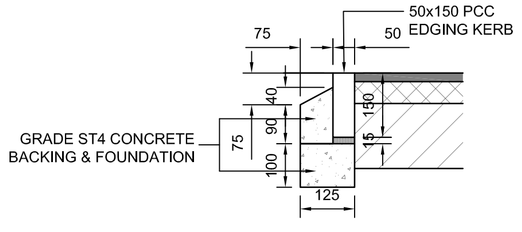

FOOTPATH EDGING DETAIL
SCALE 1:10

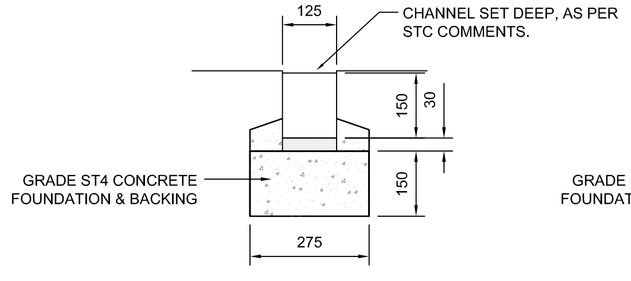

TYPICAL CHANNEL KERB DETAIL
SCALE 1:10

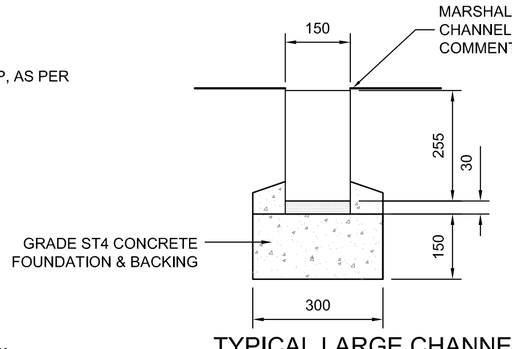

TYPICAL LARGE CHANNEL KERB DETAIL
SCALE 1:10

© Copyright Cundall 2010

1015049 A1

Based on.
Architects Drg No. Rev
Structural Drg No. Rev
Survey Drg No. Rev
Other Drg No. Rev
Other Drg No. Rev

DO NOT SCALE FROM THIS DRAWING

Notes

1. DRAWING TO BE READ IN CONJUNCTION WITH HARDSTANDING FINISHES DRAWING CLXX(90)1001 AND KERBING DRAWING CLXX(90)1002.
2. BUILDUPS DESIGNED IN ACCORDANCE WITH SOUTH TYNESIDE COUNCIL HIGHWAY DESIGN STANDARDS.
3. ALL DETAILS SUBJECT TO SOUTH TYNESIDE COUNCIL S38 APPROVAL.

Issue	Date	Description	By	Chkd	Verfd
A	16.03.18	ISSUED FOR TENDER	JS	AF	LF

Project
EAST BOLDON

Client
GENTOO HOMES

Architect
GENTOO HOMES

Title
CONSTRUCTION DETAILS

Drawing No.	Drawing Status
CLXX(95)5001	TENDER
Job No. 1015049	Scale AS SHOWN

Originator	Checked	Verified	Issue.
JS	AF	LF	A

CUNDALL
4th Floor, Partnership House
Regent Farm Road,
Gosforth,
Newcastle NE3 3AF
Telephone: +44 (0)191 213 1515
Website: www.cundall.com